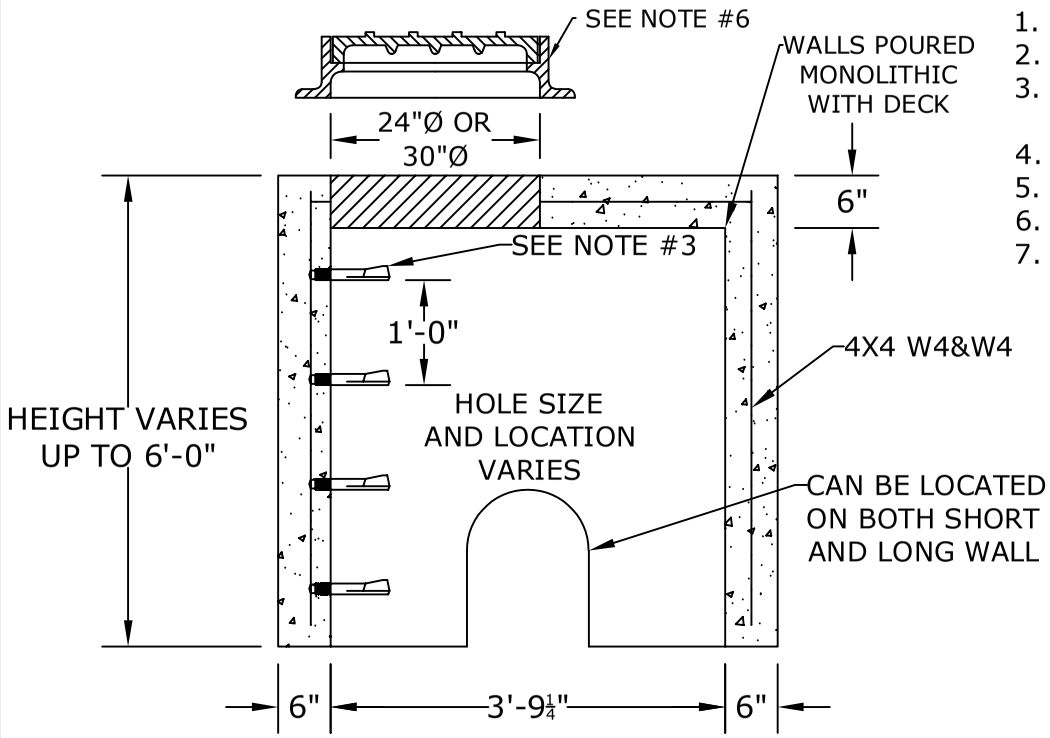

SECTION A

NOTES

1. CONCRETE- 4000 psi, AIR ENTRAINED
2. WELDED WIRE FABRIC- 4X4 W4&W4, ASTM-A185
3. LADDER RUNGS- COPOLYMER POLYPROPYLENE PLASTIC w/½" REBAR, GRADE 60
4. CONFORMS TO PENNDOT PUBLICATION 408, 72, RC46M
5. LOCATIONS OF PIPE OPENINGS AS REQUIRED
6. FRAME AND COVER- SEE ACCOMPANYING SPEC. SHEET
7. ALL MATERIAL USED MADE IN THE USA

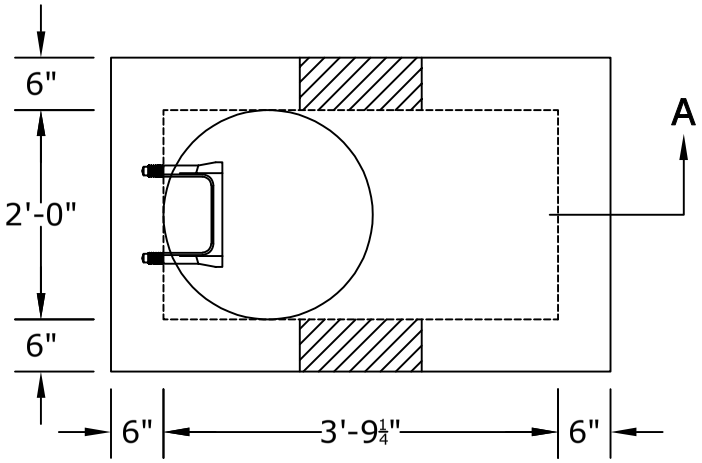

PLAN VIEW

PROJECT:

CONTR:

DATE:

TITLE: 2x4 Doghouse Inlet

ALTOMARE PRECAST, INC.
4300 Wissahickon Ave.
Philadelphia, PA 19129
Ph: 215-225-8800 Fax: 215-225-8900