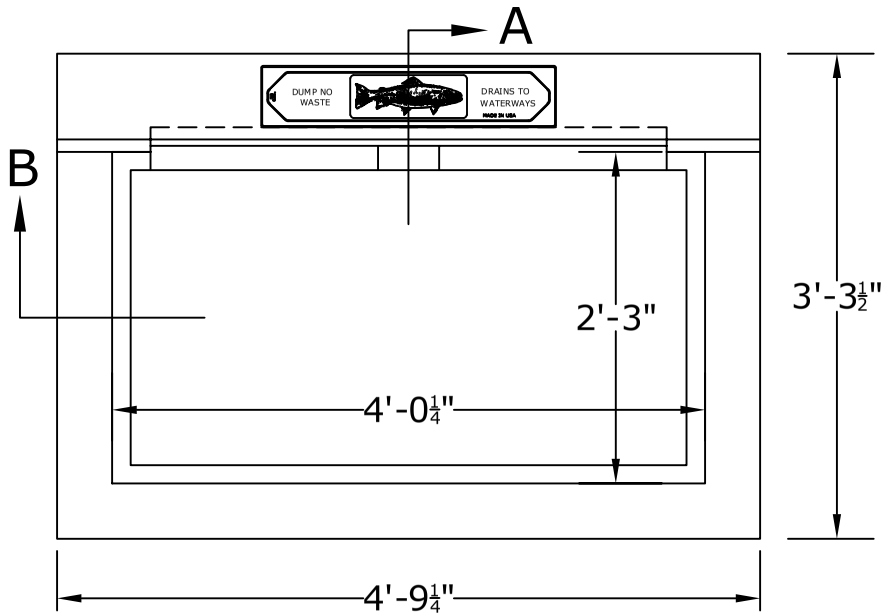

PLAN VIEW

NOTES

1. CONCRETE- 4000psi, AIR ENTRAINED
2. REINFORCING STEEL- GRADE 60, ASTM A-615
3. GRATE- SEE ACCOMPANYING SPEC. SHEET
4. PER RC-34 AND PUB. 408
5. ALL MATERIAL USED MADE IN THE USA

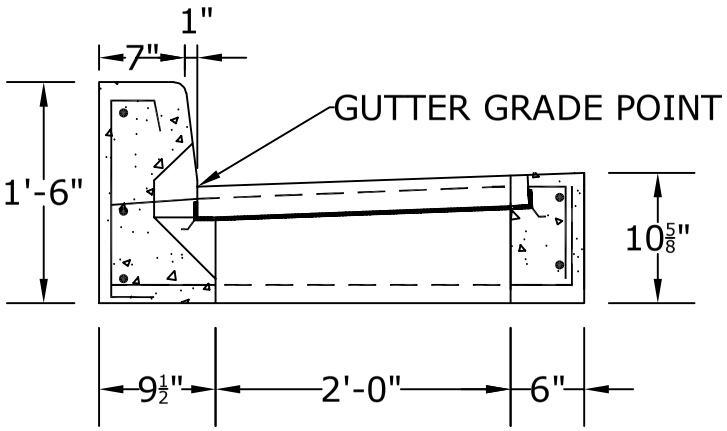

SECTION A

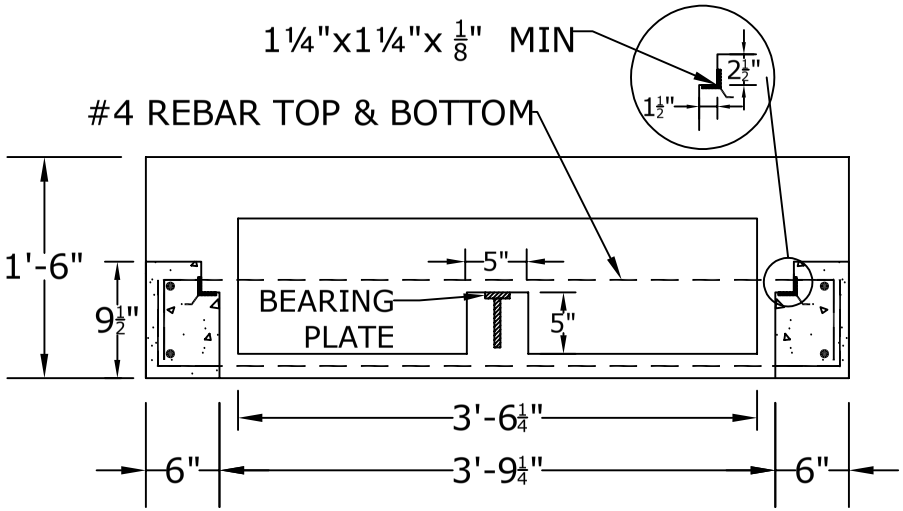

SECTION B

PROJECT: Taco Bell
CONTR: Huebner
DATE: Dec. 19, 2018

TITLE: PennDOT RC-34 Type "C" Top (8" Curb) w/ Fishplate

ALTOMARE PRECAST, INC.
4300 Wissahickon Ave.
Philadelphia, PA 19129
Ph: 215-225-8800 Fax: 215-225-8900