NOTES

1. CONCRETE- 4000psi, AIR ENTRAINED
2. REINFORCING STEEL- GRADE 60, ASTM A-615
3. WELDED WIRE FABRIC- 3x12xw3/w2 ASTM A-185
4. LADDER RUNGS- COPOLYMER POLYPROPYLENE PLASTIC w/½" REBAR, GRADE 60
5. MATERIAL AND CONSTRUCTION SHALL COMPLY WITH PENNDOT PUB. 408, 72, RC39, & A.S.T.M. C478, C890, C913, C1443 and C1557
6. FRAME AND COVER- SEE ACCOMPANYING SPEC. SHEET
7. LOCATIONS OF PIPE OPENINGS AS REQUIRED
8. ALL MATERIAL USED MADE IN THE USA

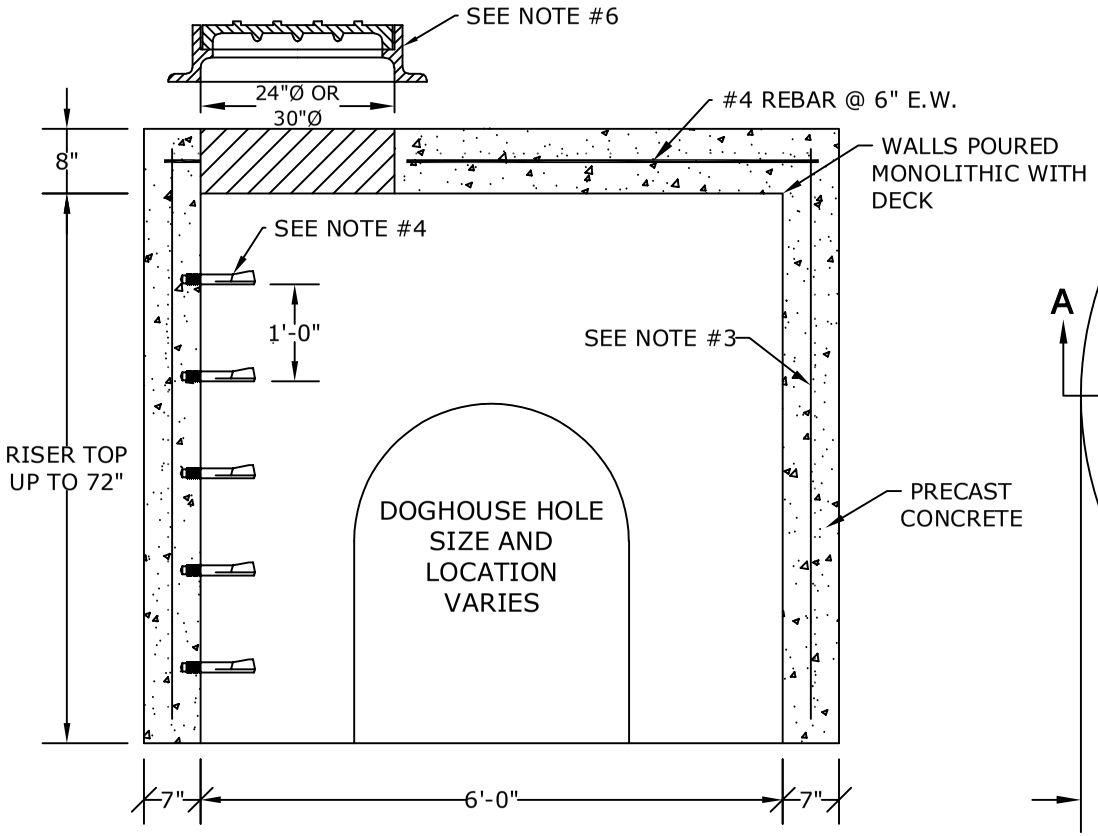

SECTION A-A

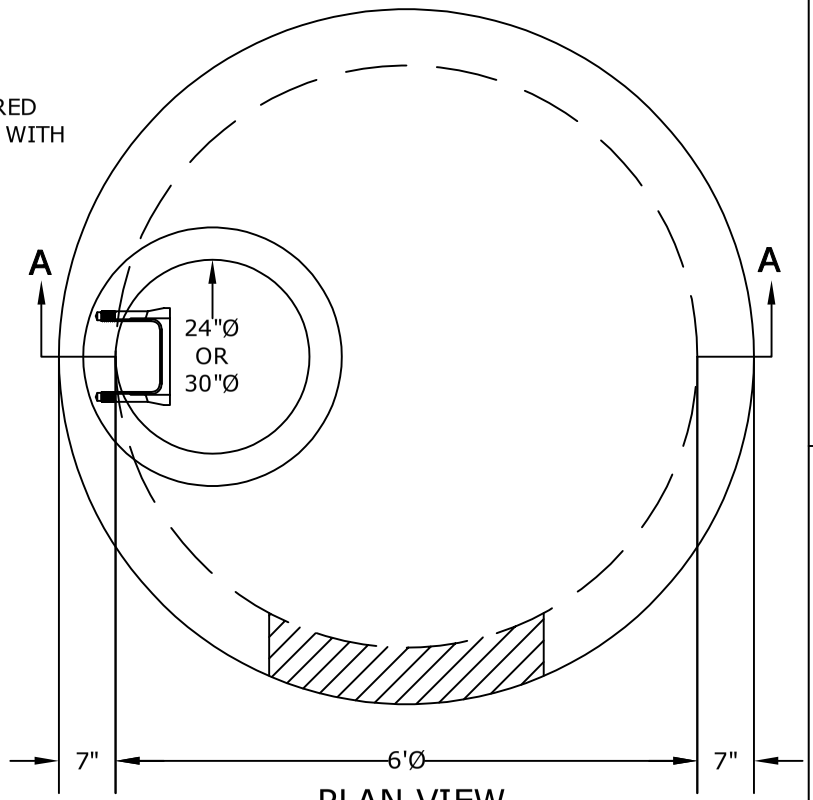

PLAN VIEW

PROJECT:

CONTR:

DATE:

TITLE: 6'Ø Doghouse Manhole

ALTOMARE PRECAST, INC.
4300 Wissahickon Ave.
Philadelphia, PA 19129
Ph: 215-225-8800 Fax: 215-225-8900