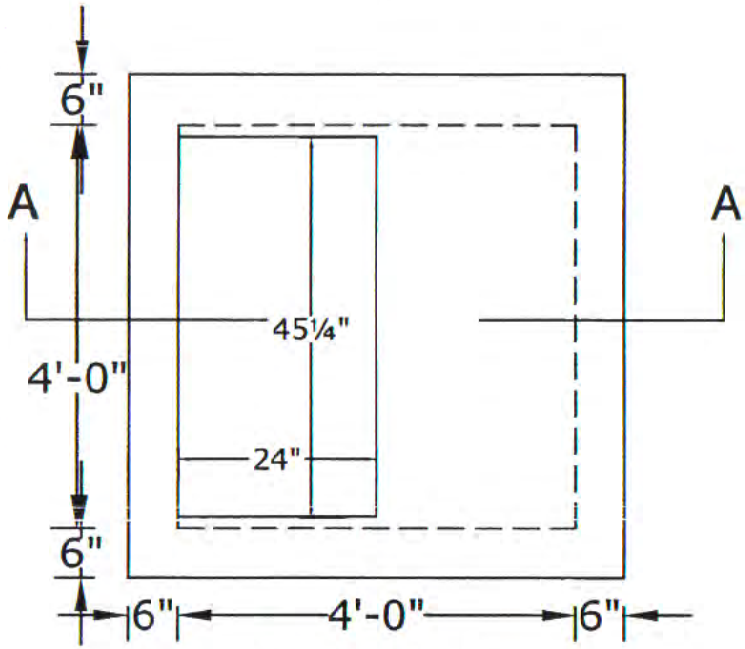

PLAN VIEW

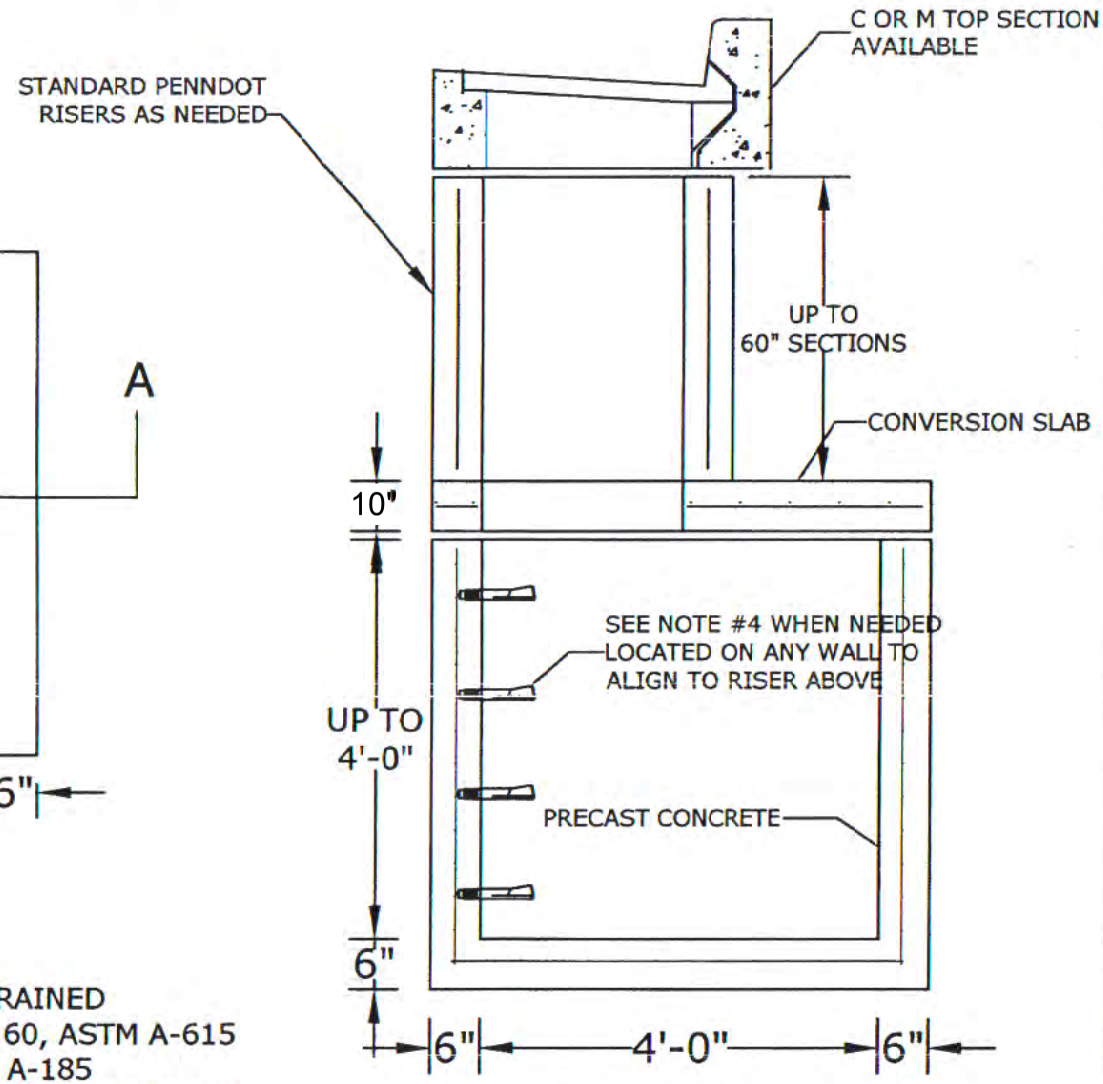

SECTION A-A

NOTES

1. CONCRETE- 4000psi, AIR ENTRAINED
2. REINFORCING STEEL- GRADE 60, ASTM A-615
3. WELDED WIRE FABRIC- ASTM A-185
4. LADDER RUNGS- COPOLYMER POLYPROPYLENE PLASTIC w/½" REBAR, GRADE 60
5. TOP SECTION- SEE ACCOMPANYING SPEC. SHEET

PROJECT:
CONTR:
DATE:

TITLE: 48" x 48" Modified Inlet Base

ALTOMARE PRECAST, INC.
4300 Wissahickon Ave.
Philadelphia, PA 19129
Ph: 215-225-8800 Fax: 215-225-8900